# PRODUCT INFORMATION

## CPA-1101

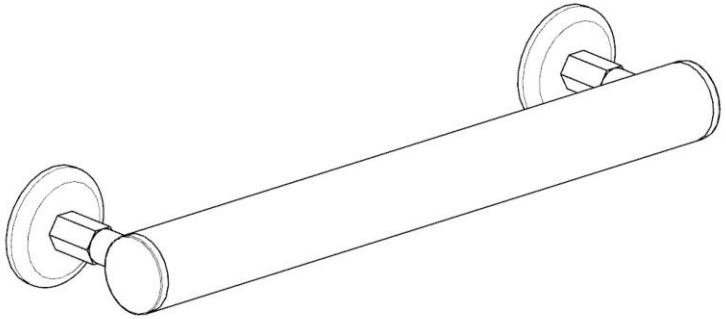

Grab bar 300mm Long

## TECHNICAL DRAWING

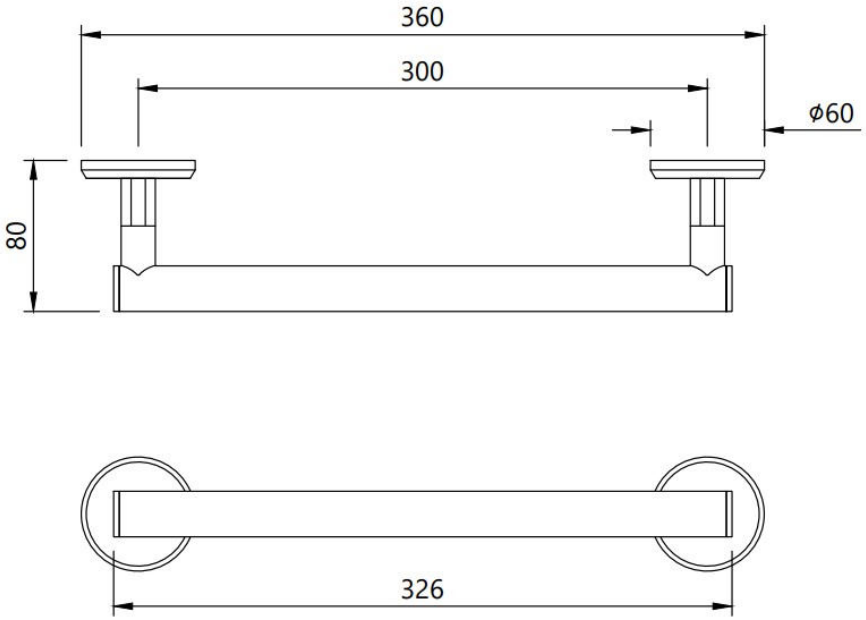

## HOW TO INSTALL

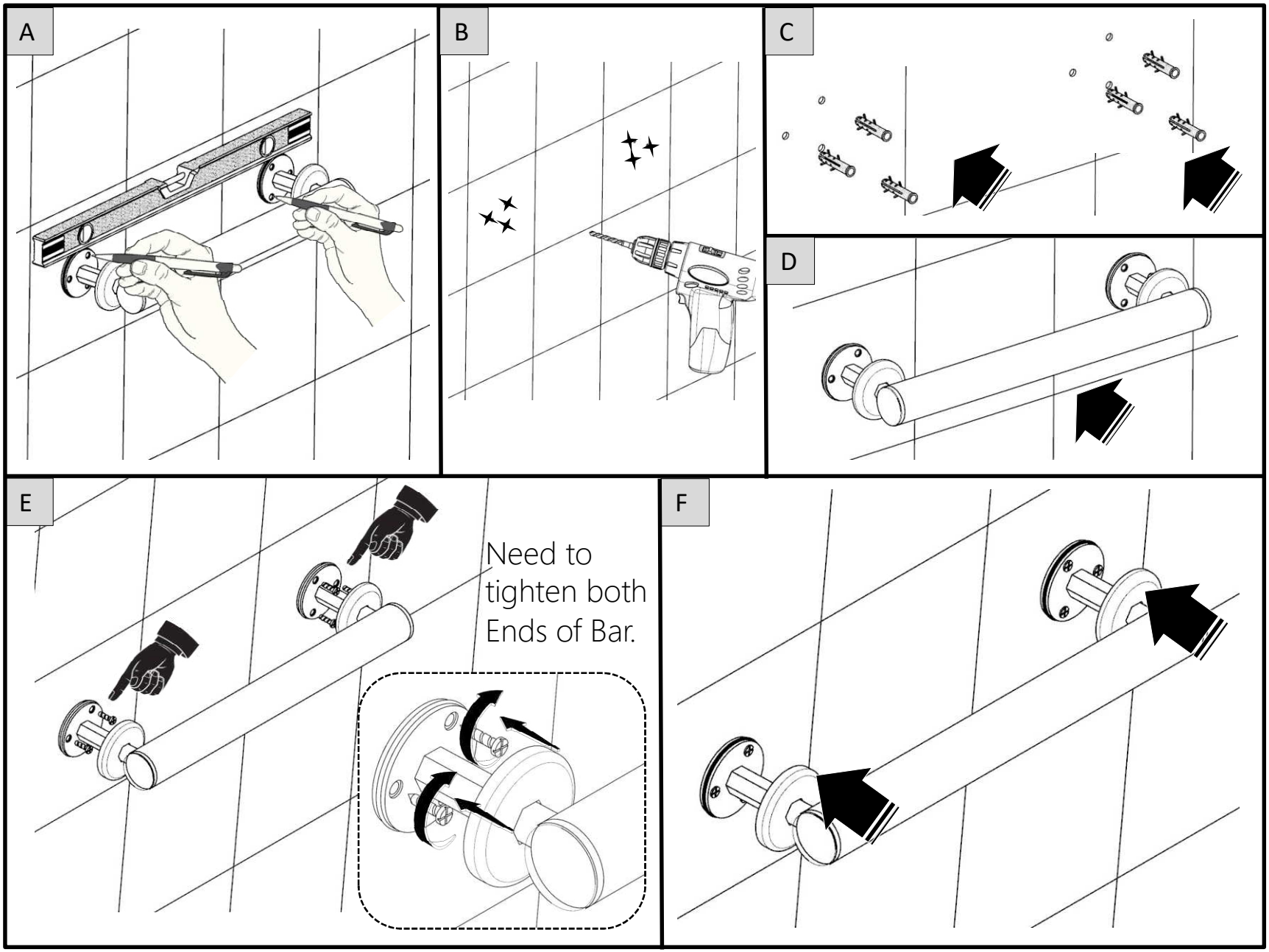
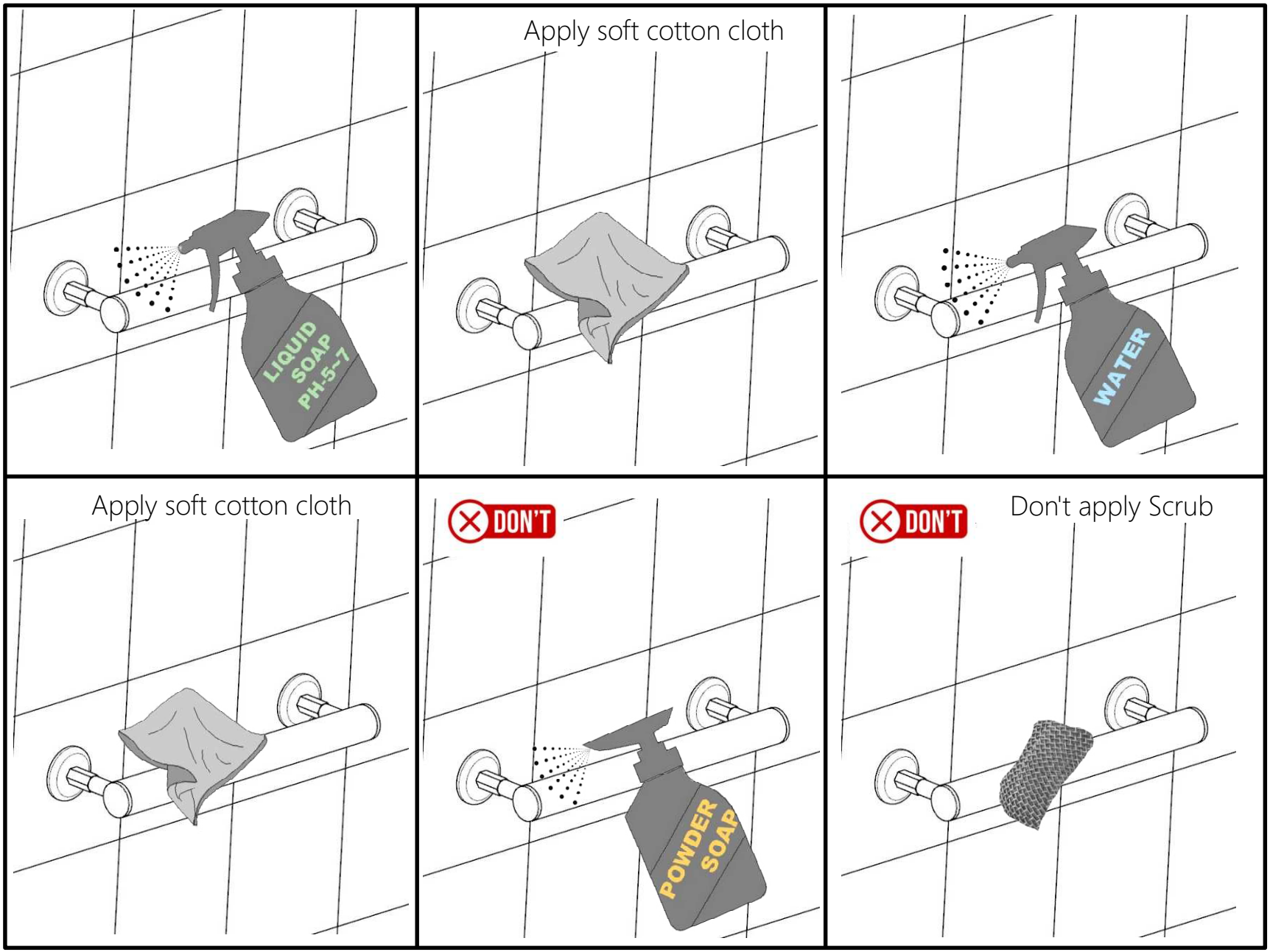
## 03 CLEANING INSTRUCTIONS