PRODUCT INFORMATION

CPA-1121RD

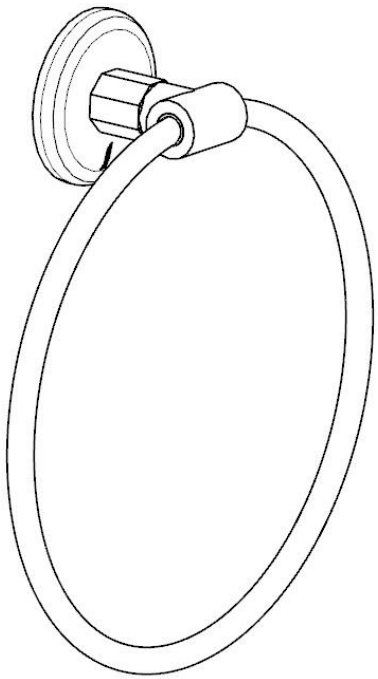

Towel Ring Round with Round Flange

TECHNICAL DRAWING

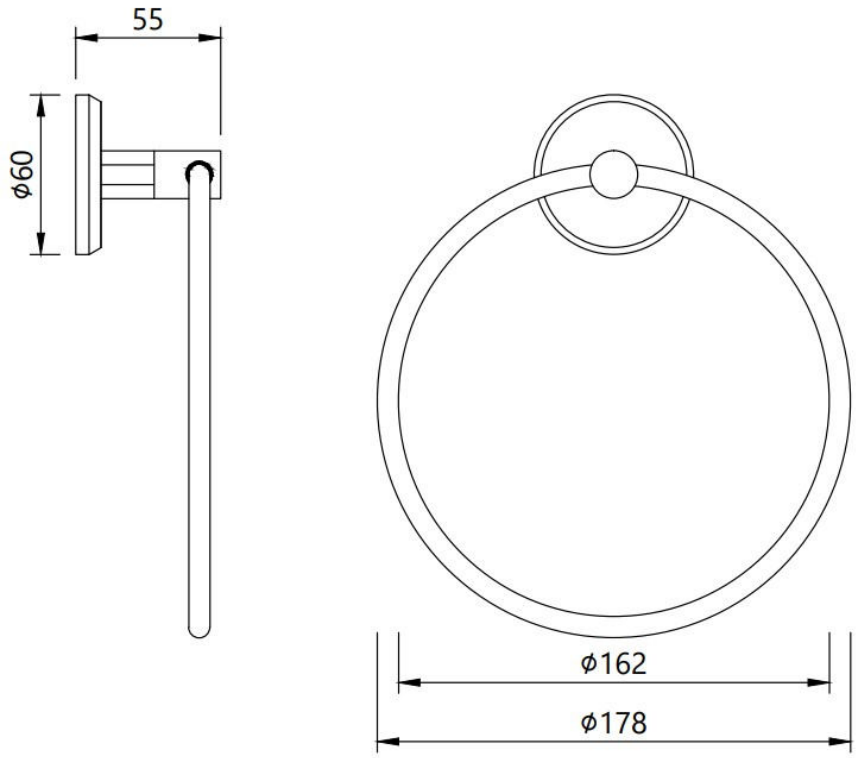

HOW TO INSTALL

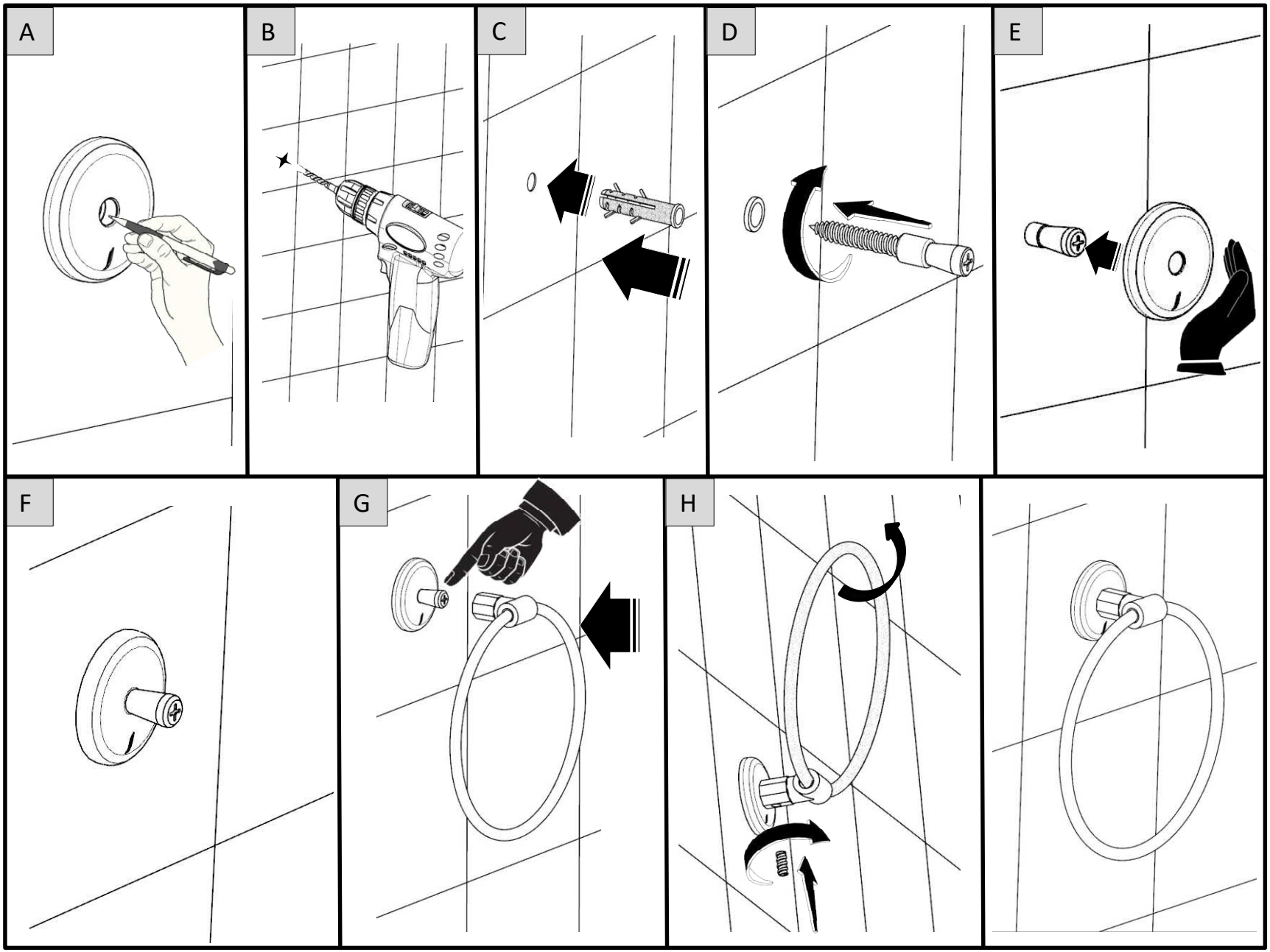
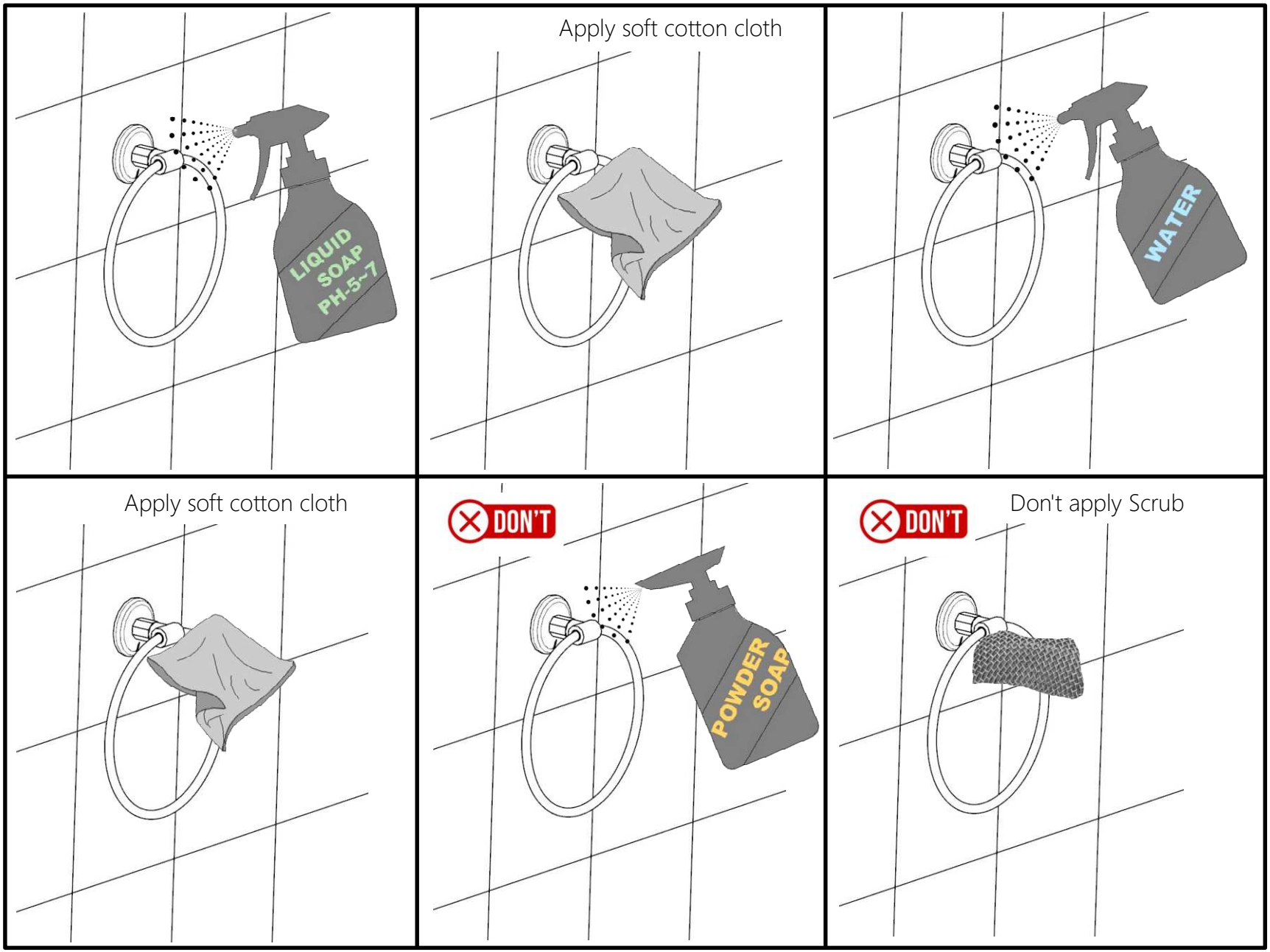
03 CLEANING INSTRUCTIONS