PRODUCT INFORMATION

Note: This Instalation Sheet is also applicable for CPA 1181FH .

CPA 1181F

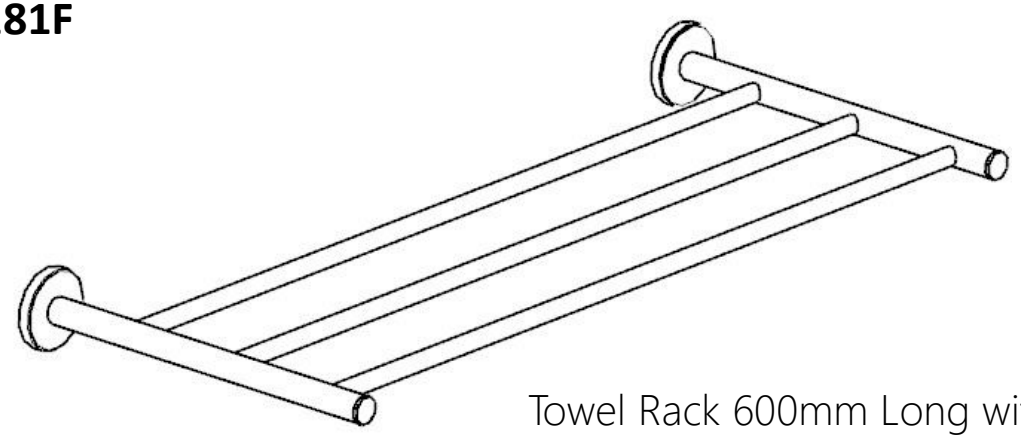

Towel Rack 600mm Long without Hanger

TECHNICAL DRAWING

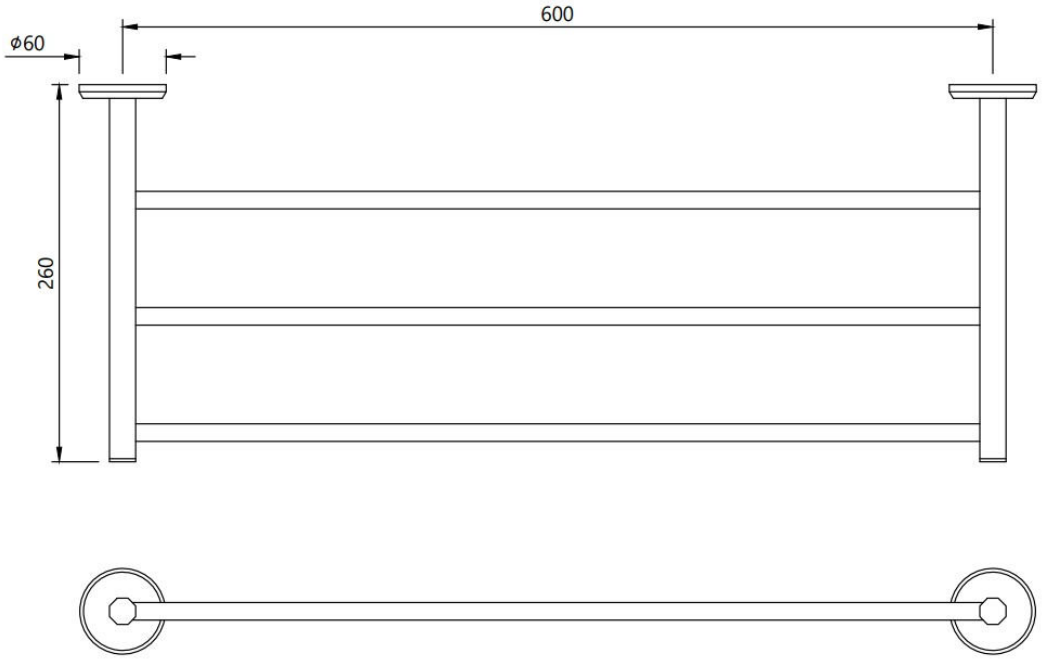

HOW TO INSTALL

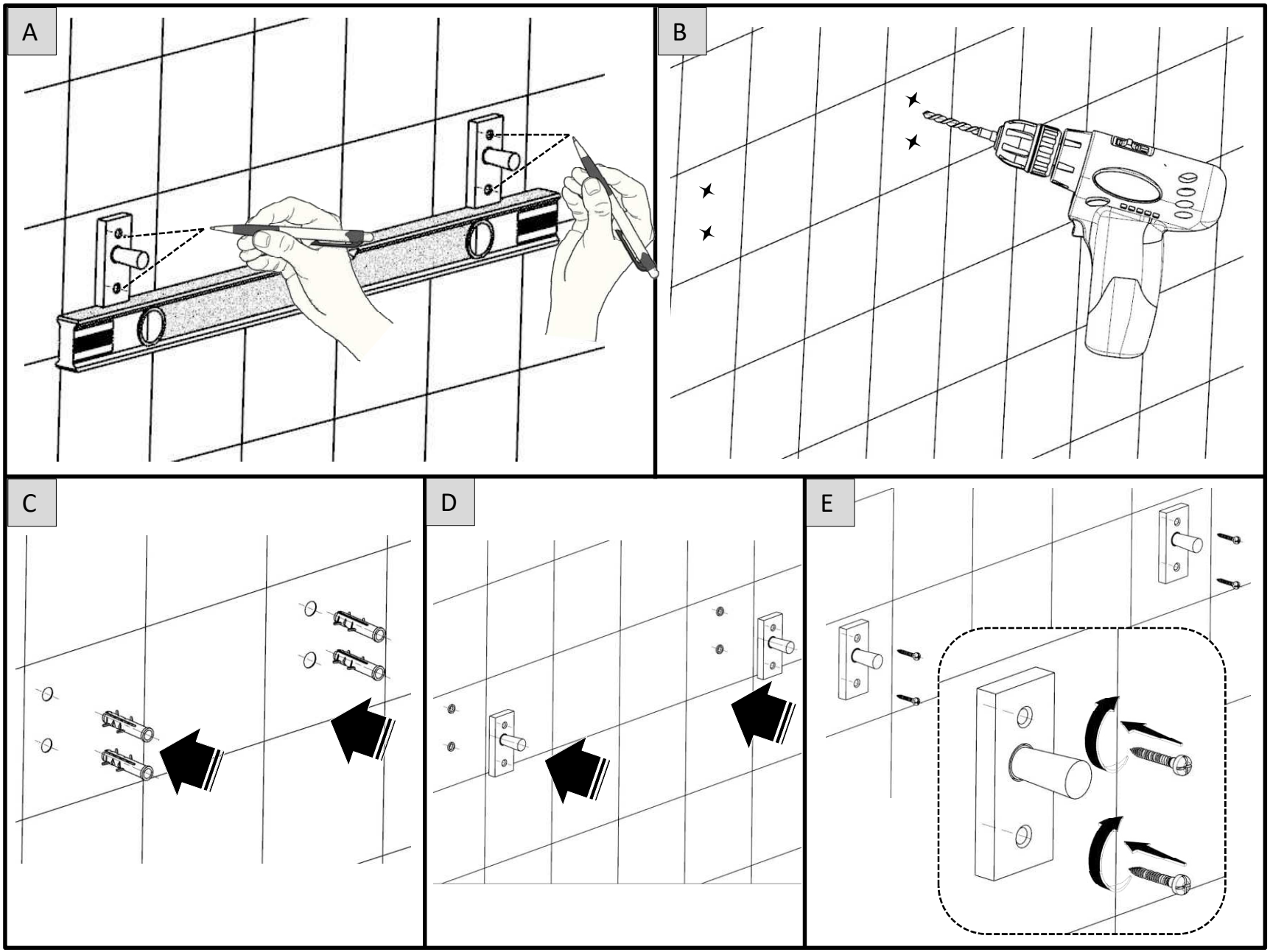

HOW TO INSTALL

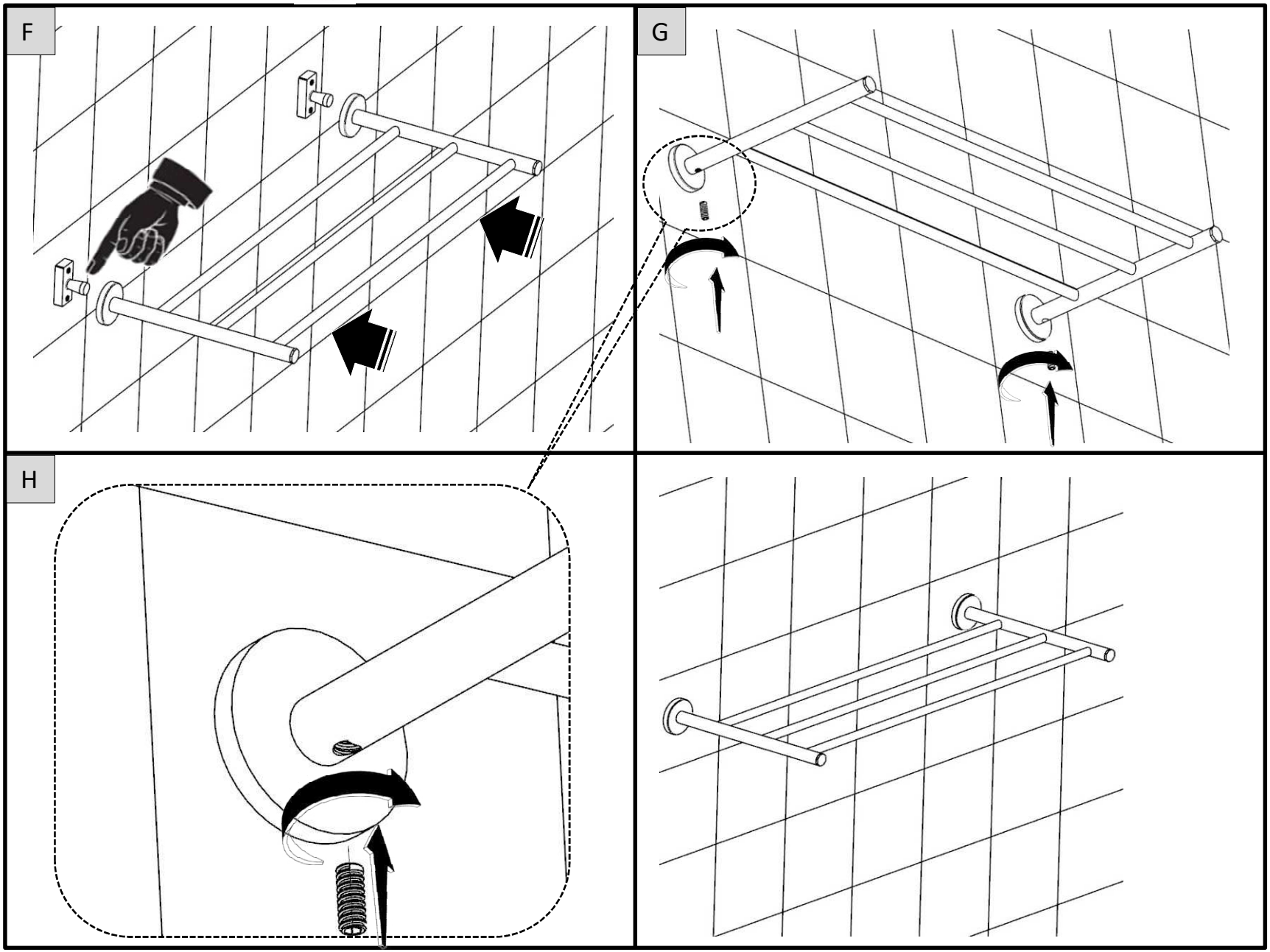
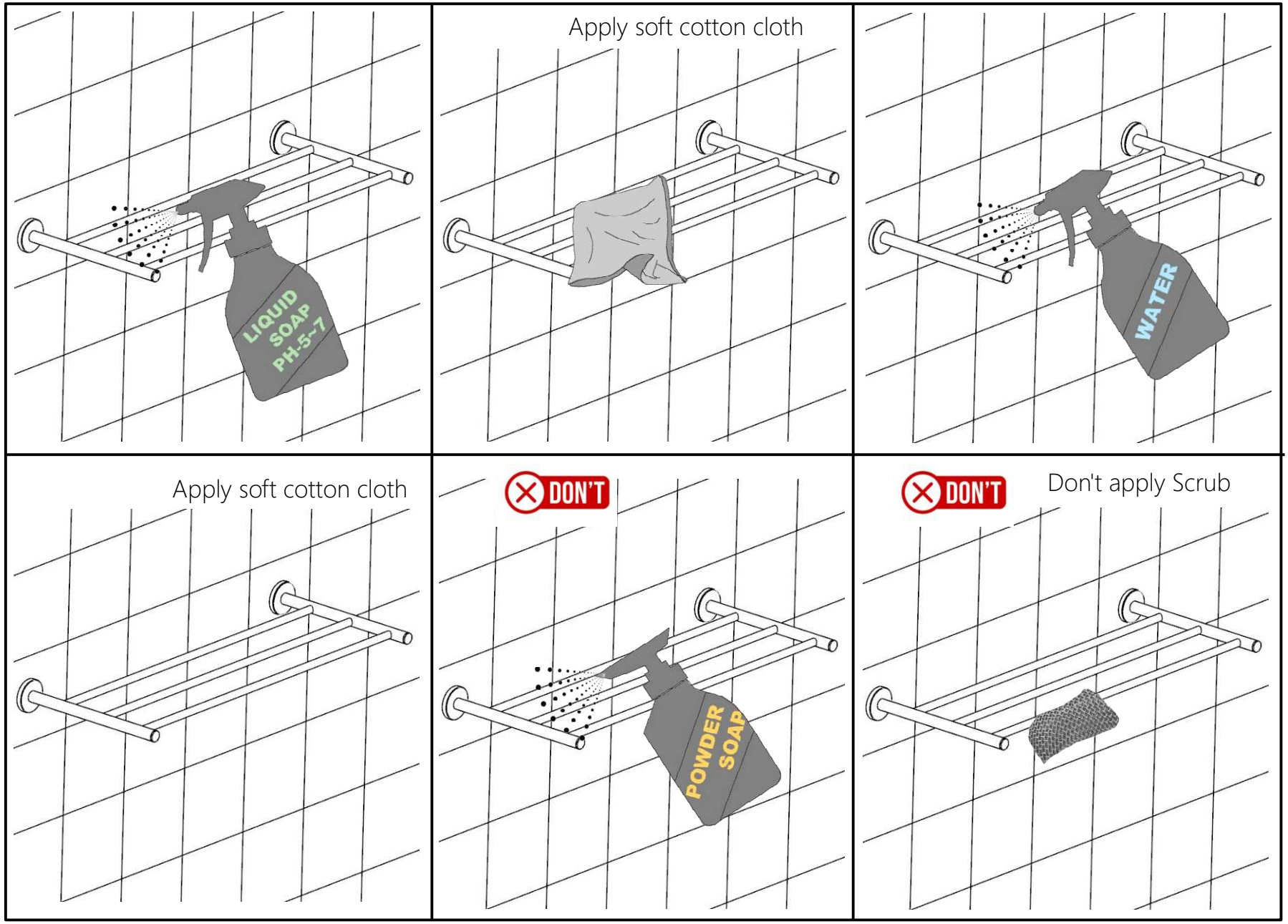
CLEANING INSTRUCTIONS