PRODUCT INFORMATION

AQN-7751

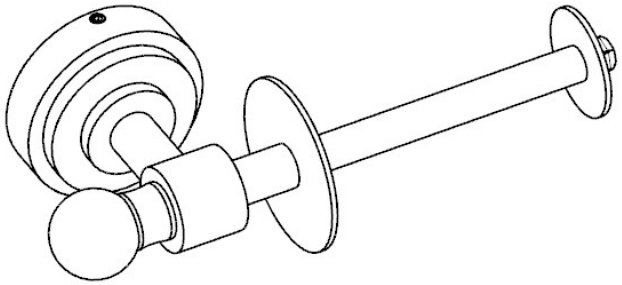

Toilet Roll Holder

TECHNICAL DRAWING

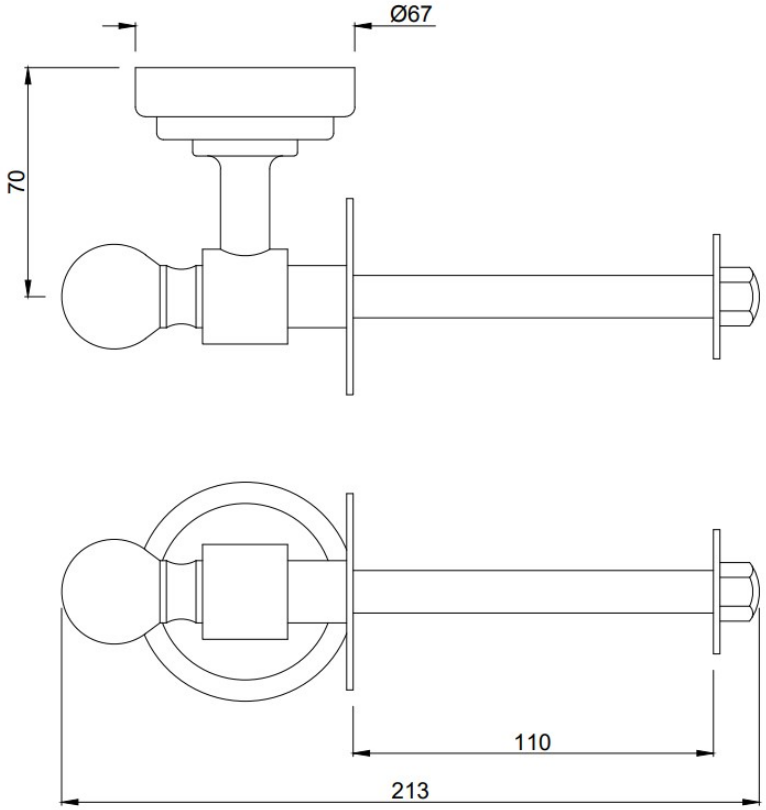

HOW TO INSTALL

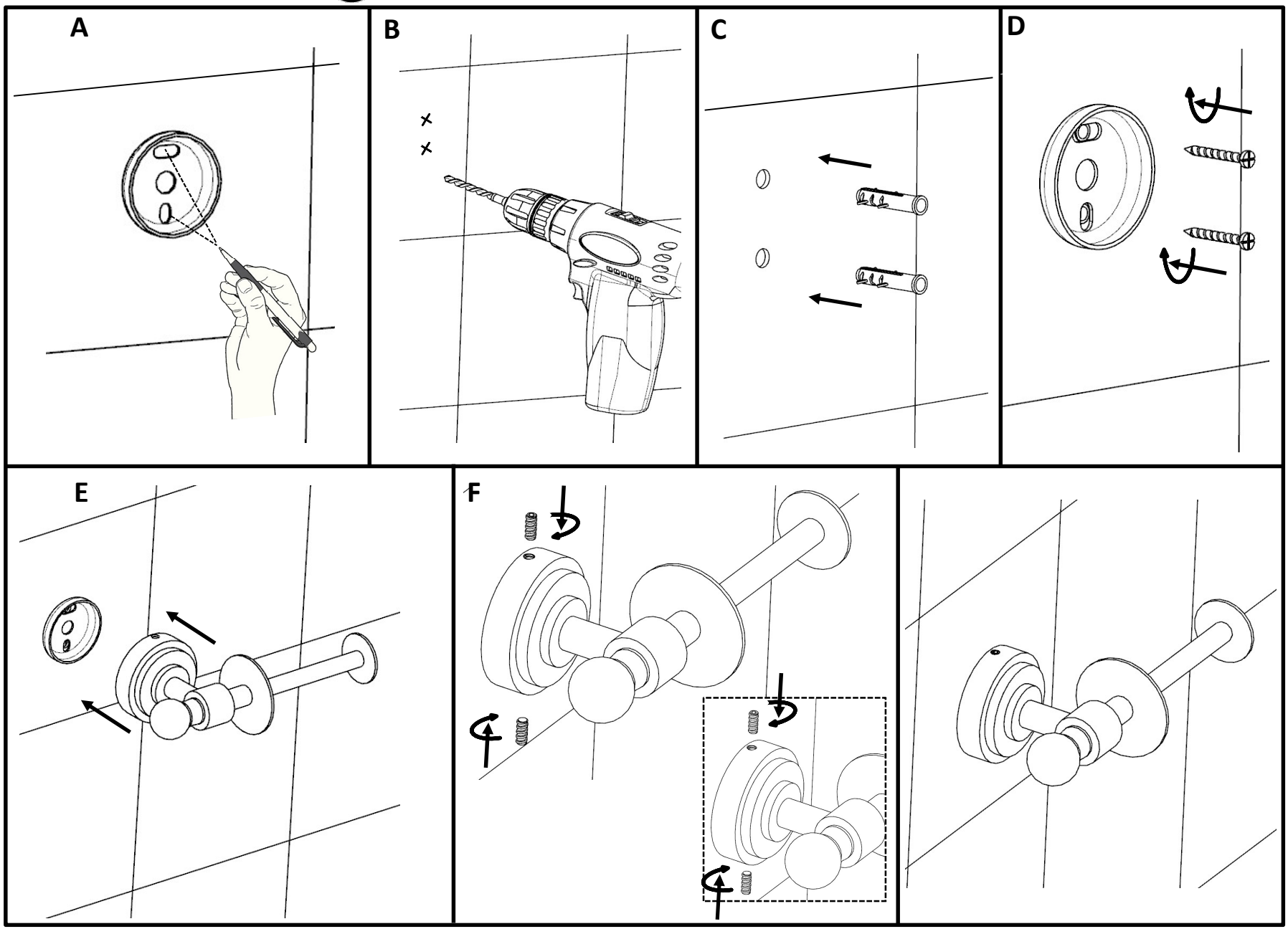
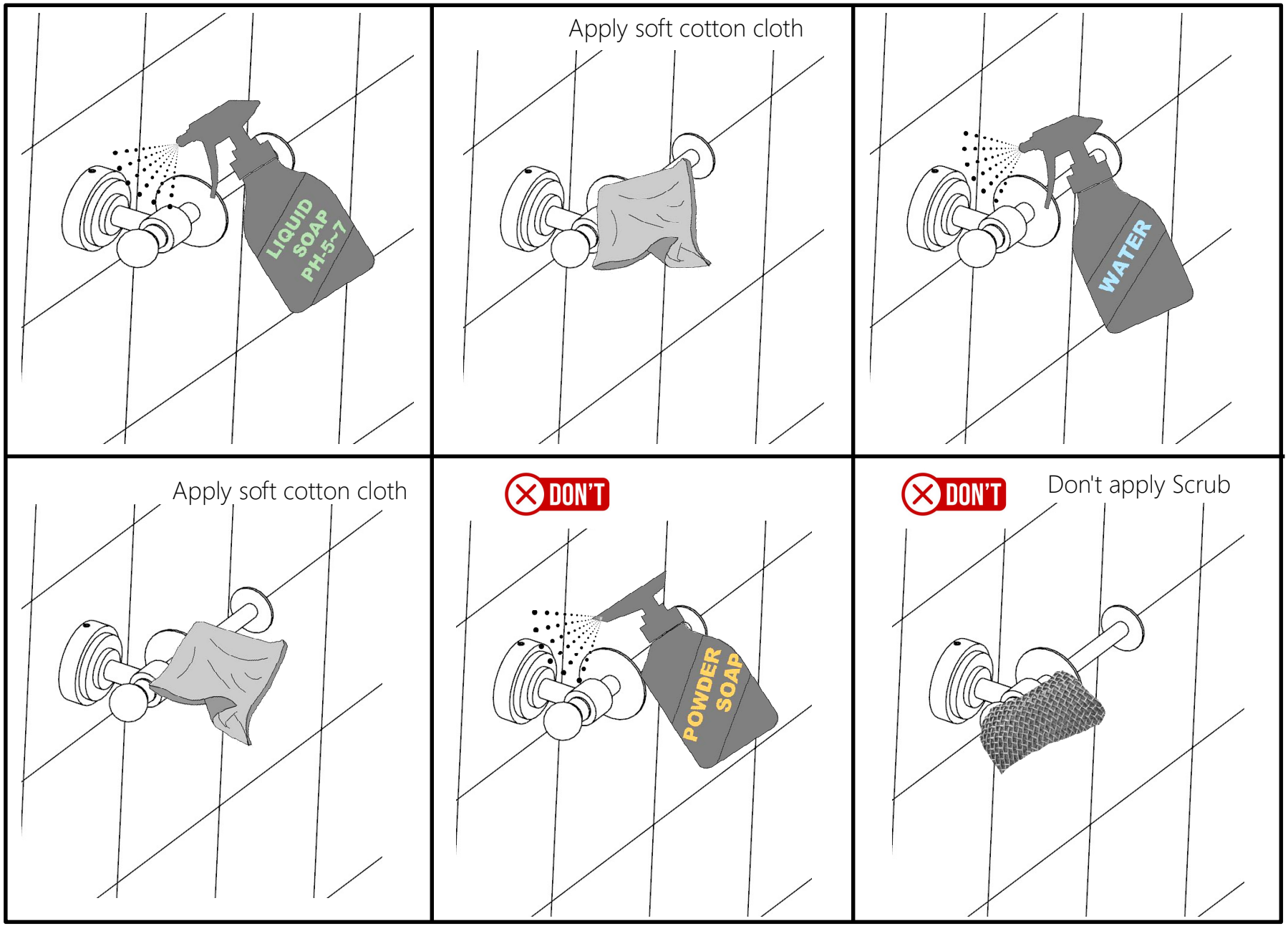
CLEANING INSTRUCTIONS