PRODUCT INFORMATION

AQN 7755

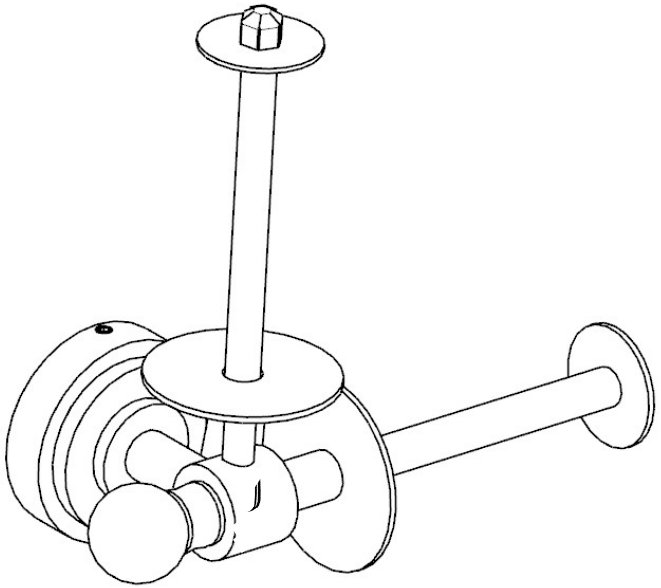

Toilet Roll Holder twin Type

TECHNICAL DRAWING

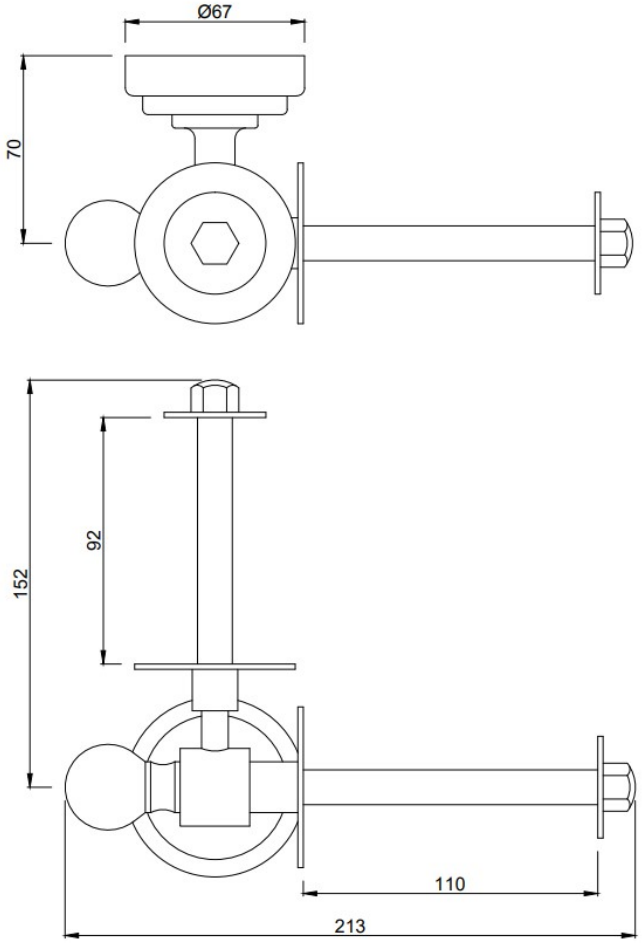

HOW TO INSTALL

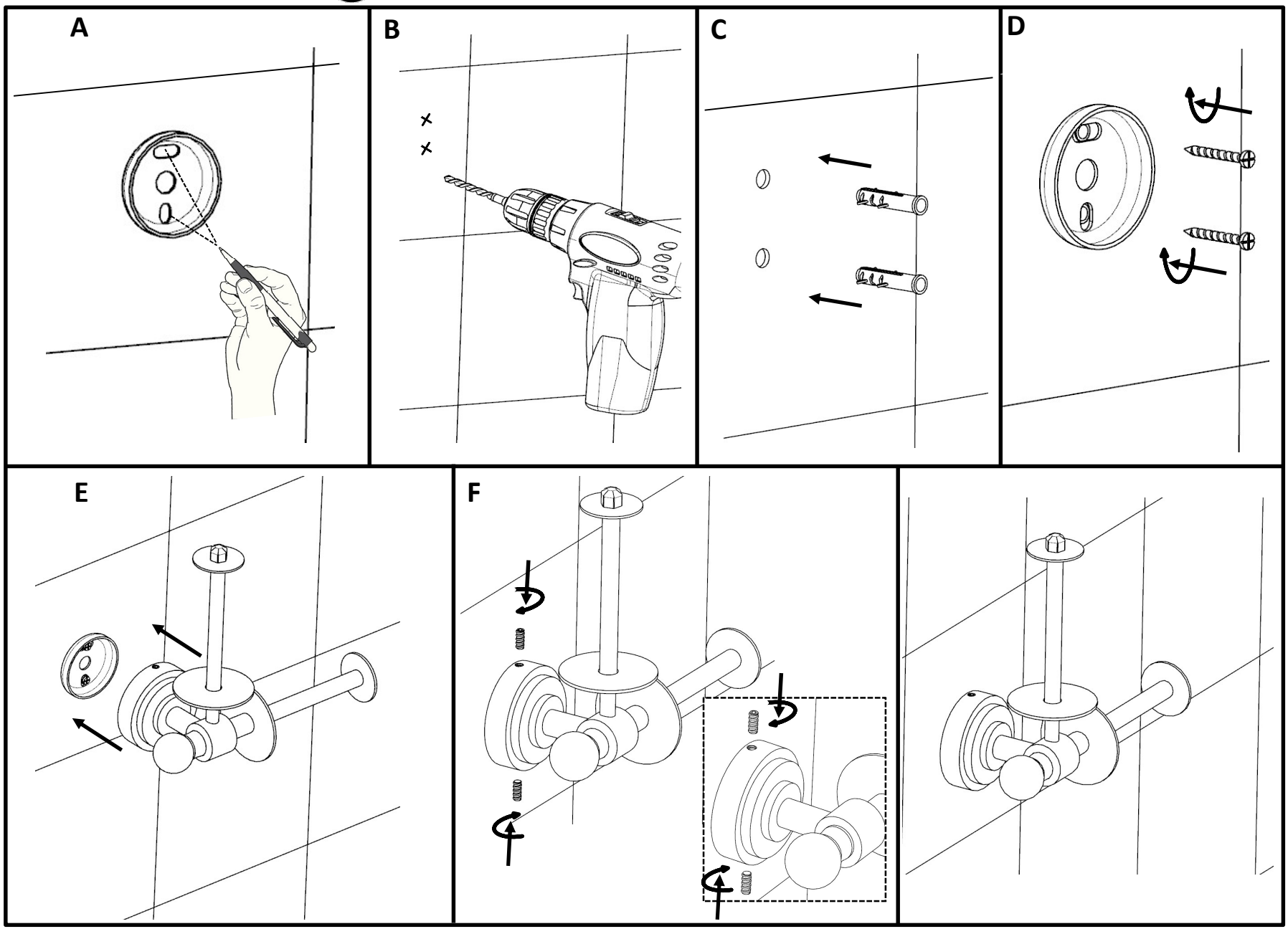
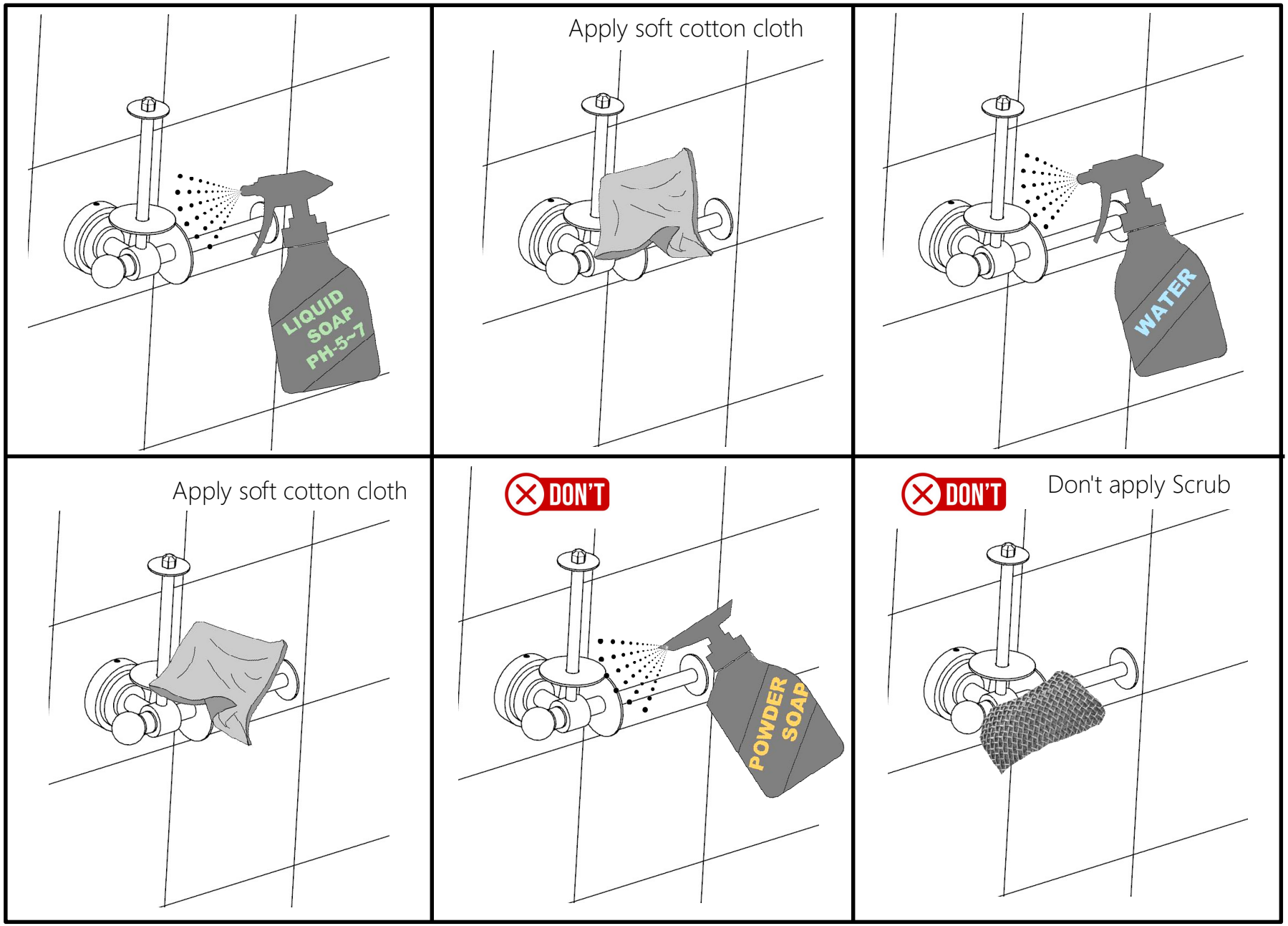
CLEANING INSTRUCTIONS